SIEMENS

Data sheet 3WL1220-4CB32-1AA2

fixed-mounted circuit breaker 3-pole, size II, IEC In=2000A to 690V, AC50/60Hz Icu=100kA at 500V rear connection horizontal Overcurrent release ETU 25 LSI protection adjustable 0.4-1 in With manual operating mechanism with storage with mechanical request without 1st auxiliary release without 2nd auxiliary release 2NO+2NC

Model	
product brand name	SENTRON
product designation	ACB
design of the product	IEC 60947-2
design of the actuating element	Pushbutton
type of the driving mechanism	Manual operating mechanism with mechanical closing
type of the driving mechanism / motor drive	No
design of the overcurrent release	ETU25B
General technical data	
number of poles	3
size of the circuit-breaker	2
utilization category	B
circuit-breaker / Design	3WL1
Voltage	
Rated insulation voltage Ui	1 000 V
insulation voltage / rated value	1 000 V
operating voltage	
● at AC / at 50/60 Hz / rated value	690 V
Protection class	
protection class IP	IP20
● protection class IP / on the front	IP20
● protection function of the overcurrent release	LSI
Dissipation	
power loss [W]	
● for rated value of the current / at AC / in hot operating state / per pole	60 W
● maximum	180 W
Main circuit	
operating frequency	
● 1 / rated value	50 Hz
● 2 / rated value	60 Hz
Auxiliary circuit	
number of NC contacts / for auxiliary contacts	2
number of NO contacts / for auxiliary contacts	2
Suitability	
suitability for use	Plant / motor protection
Adjustable parameters	
adjustable current response value current / of the current-dependent overload release / initial value	800 A
Product details	
product component	
● trip indicator	Yes
● voltage trigger	No
● undervoltage release	No
design of the auxiliary switch	2 NO + 2 NC
product extension / optional / motor drive	Yes
Product function	
product function	

Subject to change without notice
© Copyright Siemens

● grounding protection	No
● phase failure detection	Yes
Display and operation	
display version	without display
Short circuit	
operating short-circuit current breaking capacity (Ics)	
● at 415 V / rated value	100 kA
● at 500 V / rated value	100 kA
● at 690 V / rated value	85 kA
maximum short-circuit current breaking capacity (Icu)	
● at 415 V / rated value	100 kA
● at 500 V / rated value	100 kA
● at 690 V / rated value	85 kA
Connections	
arrangement of electrical connectors / for main current circuit	Main connection rear side horizontal
type of electrical connection / for main current circuit	busbar connection
Mechanical Design	
height	440.5 mm
width	460 mm
depth	337 mm
fastening method	fixed mounting
Environmental conditions	
ambient temperature / during operation	
● minimum	-20 °C
● maximum	70 °C
ambient temperature / during storage	
● minimum	-40 °C
● maximum	70 °C

General Product Approval			EMC	Declaration of Conformity	
CCC	Confirmation	EAC	RCM	CE EG-Konf.	UKCA

Test Certificates			Marine / Shipping		
Type Test Certificates/Test Report	Miscellaneous	Special Test Certificate	ABS	BUREAU VERITAS	Lloyd's Register LRS

Marine / Shipping			other		
RMRS	CCS / China Classification Society	DNV·GL	Confirmation	Miscellaneous	Miscellaneous

Dangerous Good	Environment
Transport Information	Environmental Confirmations

Subject to change without notice
© Copyright Siemens

Further information

Information on the packaging
https://support.industry.siemens.com/cs/ww/en/view/109813875
Industry Mall (Online ordering system)
https://mall.industry.siemens.com/mall/en/en/Catalog/product?mlfb=3WL1220-4CB32-1AA2
Service&Support (Manuals, Certificates, Characteristics, FAQs,...)
https://support.industry.siemens.com/cs/ww/en/ps/3WL1220-4CB32-1AA2
Image database (product images, 2D dimension drawings, 3D models, device circuit diagrams, ...)
http://www.automation.siemens.com/bilddb/cax_en.aspx?mlfb=3WL1220-4CB32-1AA2
CAx-Online-Generator
http://www.siemens.com/cax
Tender specifications
http://www.siemens.com/specifications

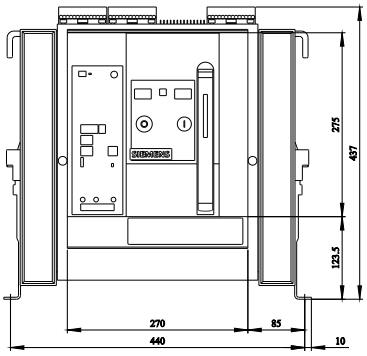

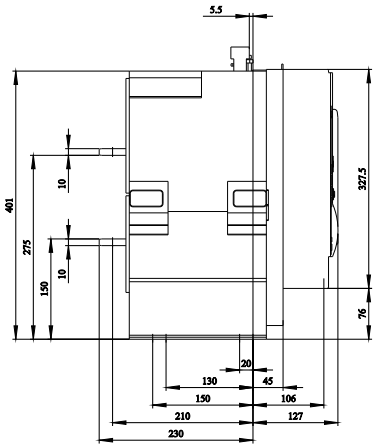

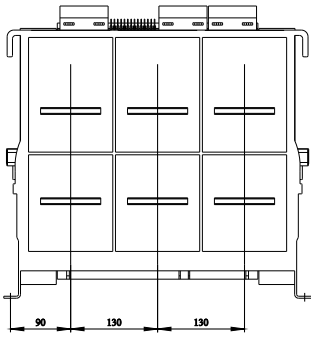

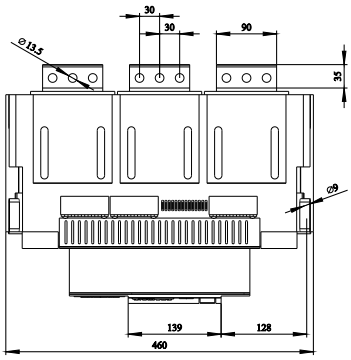

Subject to change without notice
© Copyright Siemens

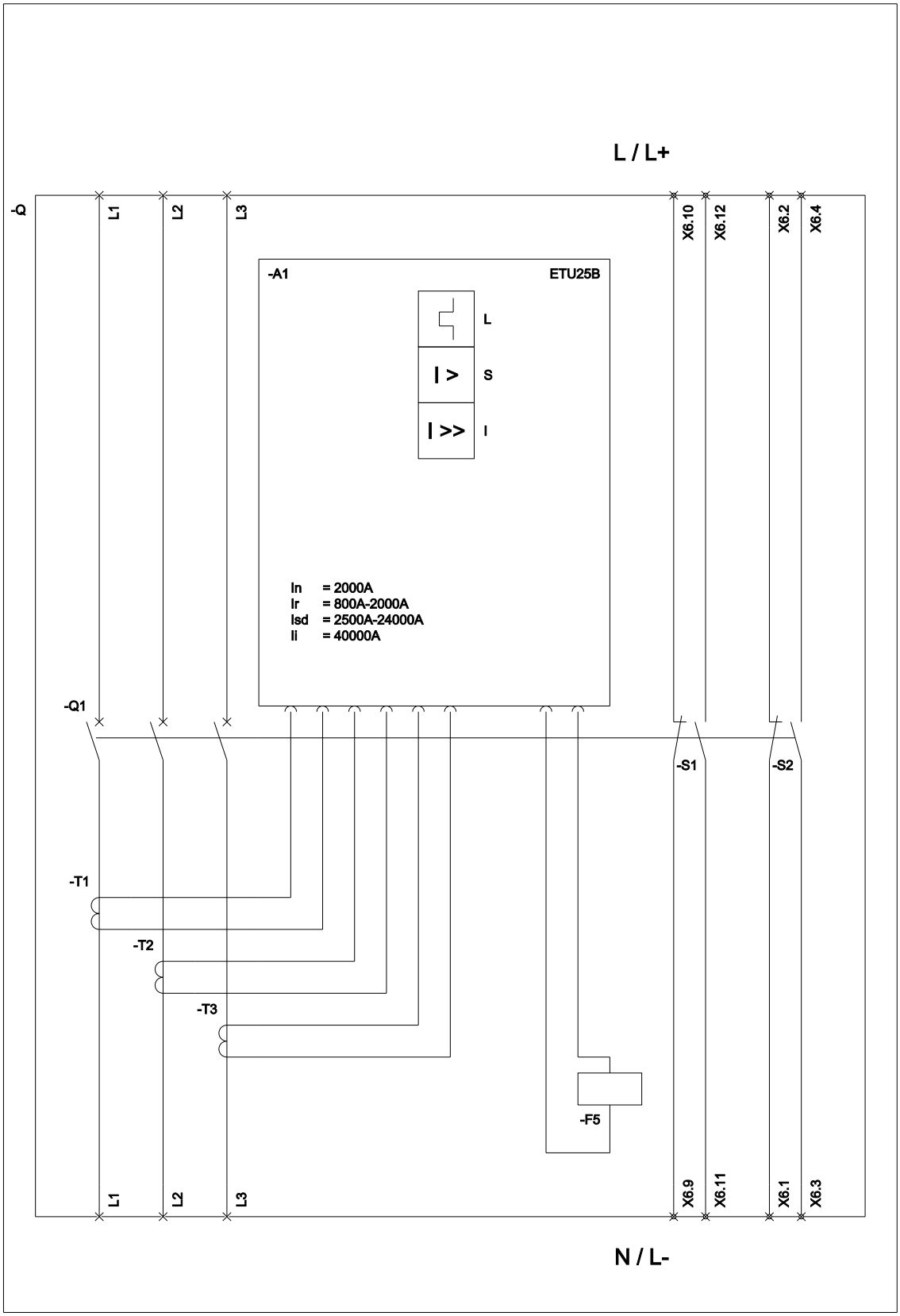

L (Long Time Delay / Überlastschutz); S (Short Time Delay / Kurzschlussschutz, kurzzeitverzögert);
I (Instantaneous / Kurzschlussschutz, unverzögert); F5 (Maglatch for trip unit / Auslösemagnet);
S1 - S8 (Auxiliary switch / Hilfsschalter);

Subject to change without notice
© Copyright Siemens

Subject to change without notice
© Copyright Siemens

last modified: 3/30/2020

Subject to change without notice
© Copyright Siemens